Spot AI NEMA Box Install Guide

POWERED BY spot.ai

Tools:

- #2 Phillips Screwdriver
- Small Allen key (provided) for bullet cam adjustments
- Large Allen key (provided) for PTZ mounting

Parts List:

- NEMA Box with mounts attached
- 2x Bullet cameras
- 1x PTZ camera
- 1x Audio Horn

Step 1:

Pull NEMA out of box.



Step 2:

Remove two M6x16 screws (#2 Phillips) on the back of the box that holds the mount in place.



Step 3:

Mount the bracket that was just removed to your wall using this pattern of screws with washers or to a pole using 4 band clamps.

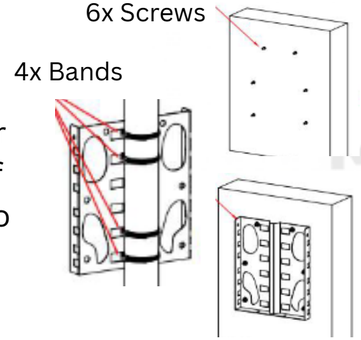

Step 4:

After securing the bracket to the wall/ pole, slide the NEMA onto the bracket. Secure with 2 screws you removed in step 2 M6x16 (#2 Phillips). Make sure the interlocking mount slides into the holes on the bottom of the bracket.

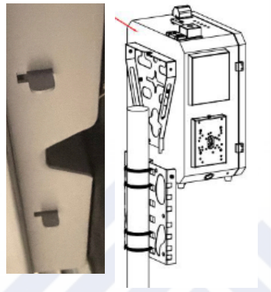



Step 5:

Open Cam #1, while facing the NEMA box install this camera on the **Left Side** by first attaching the network cable, then screwing the camera into the mount with the captive screws and #2 Phillips.

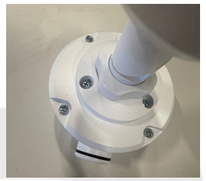



Step 6:

Open Cam #2, while facing the NEMA box install this camera on the **Bottom Side**. First connect the network cable then push the camera up into the mount, making sure to tighten down the set screws (that are in the mount) with a #2 Phillips and the provided Allen key.





Step 7:

Similar to Cam #1, open Cam #3, while facing the NEMA box install this camera on the **Right Side** by first attaching the network cable then screwing the camera into the mount with the captive screws and provided Allen key.

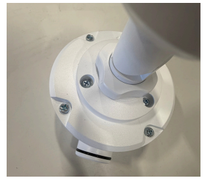



Step 8:

Pull Horn out of its box and remove the bracket from the Horn. Mount the horn **bracket by itself** to the **top of the box** using screws on top of the NEMA. Install Horn onto bracket using a #2 Phillips.





Step 9:

Remove metal box cap from the top of the NEMA. Access the network cable and run it under the metal box **through the small opening.** Plug the CAT5 into the horn and reinstall the box.







Step 10:

After connecting power to your NEMA box, flip the blue/red breaker to the ON (UP) position, and flip the black power switch to the right so that 0 is down and | is up.



Step 11:

Ensure all network cables are connected and screws are tight! (Loose screws can allow water to penetrate. For best seal, check all screws and tighten all mounts until they are flush, to minimize water leakage.

Two Leaders.
One Smarter Security Solution.
MS3 and Spot AI.

POWERED BY spot.ai

MS3